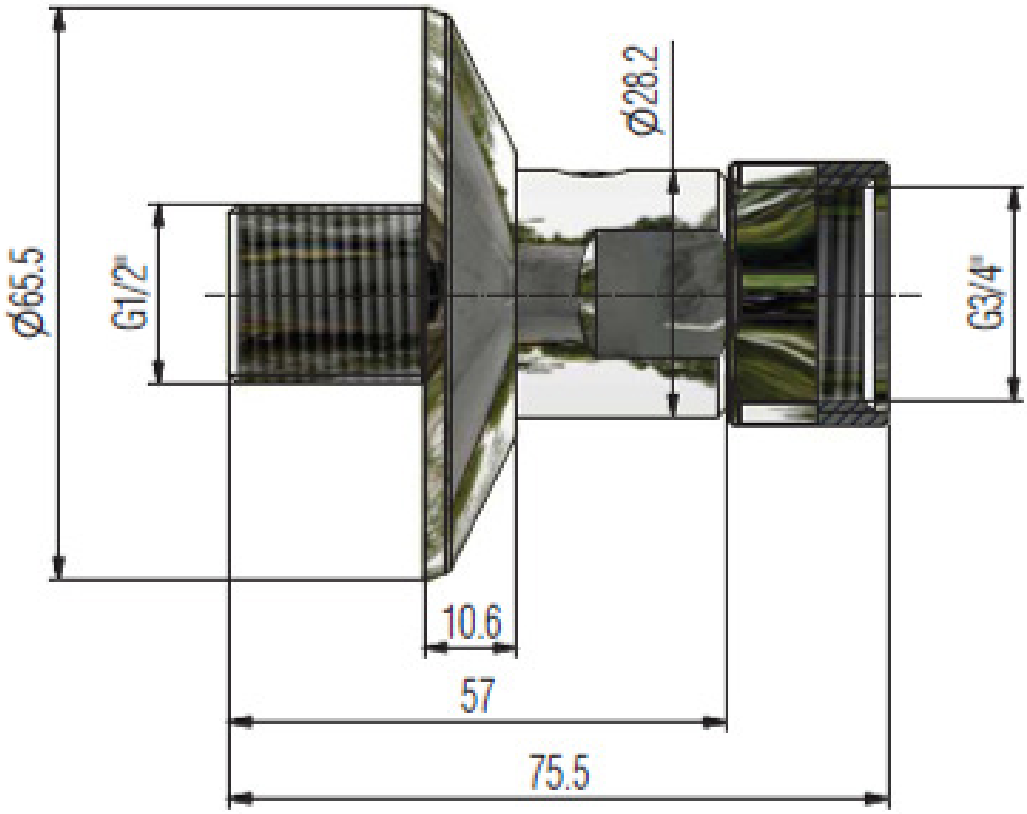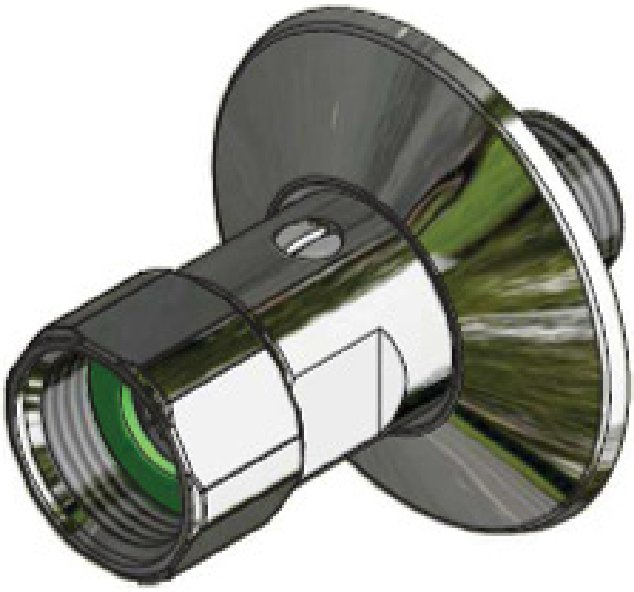
Ø65.5
G1/2"
Ø28.2
G3/4"
10.6
57
75.5