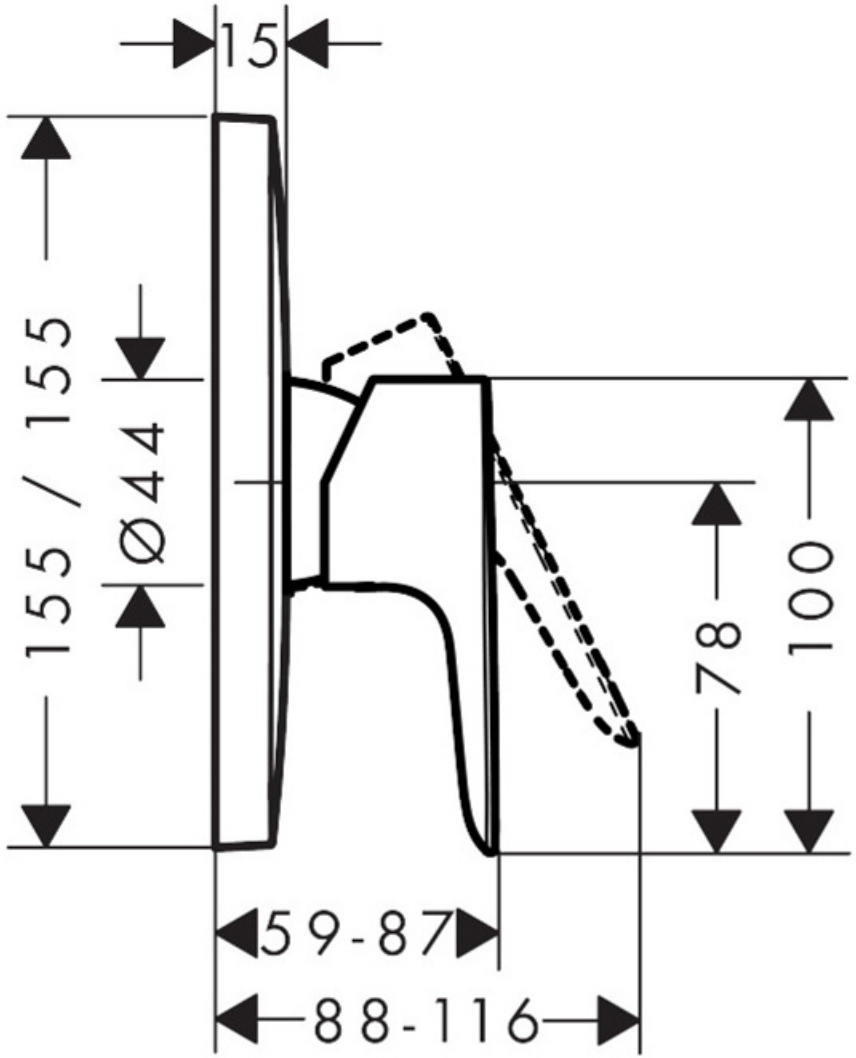
15
155 / 155
Ø44
78
100
59-87
88-116