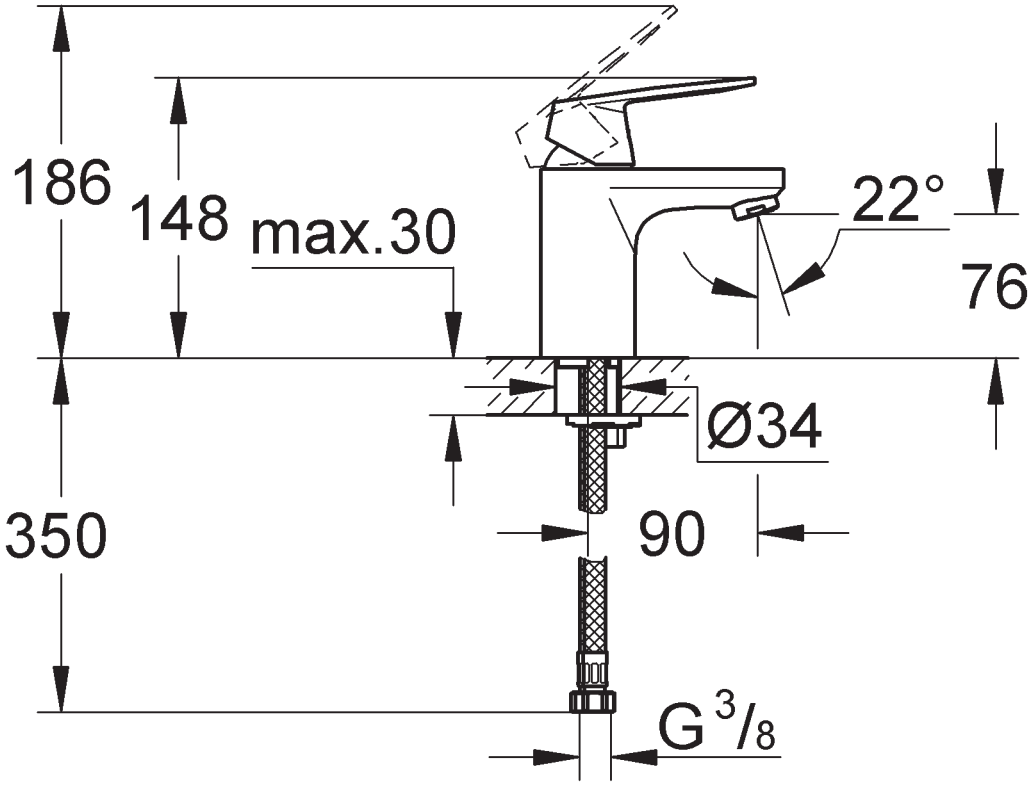
186
148
max.30
22°
76
Ø34
350
90
G 3/8

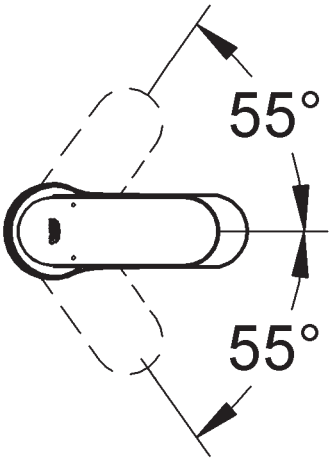
55°
55°